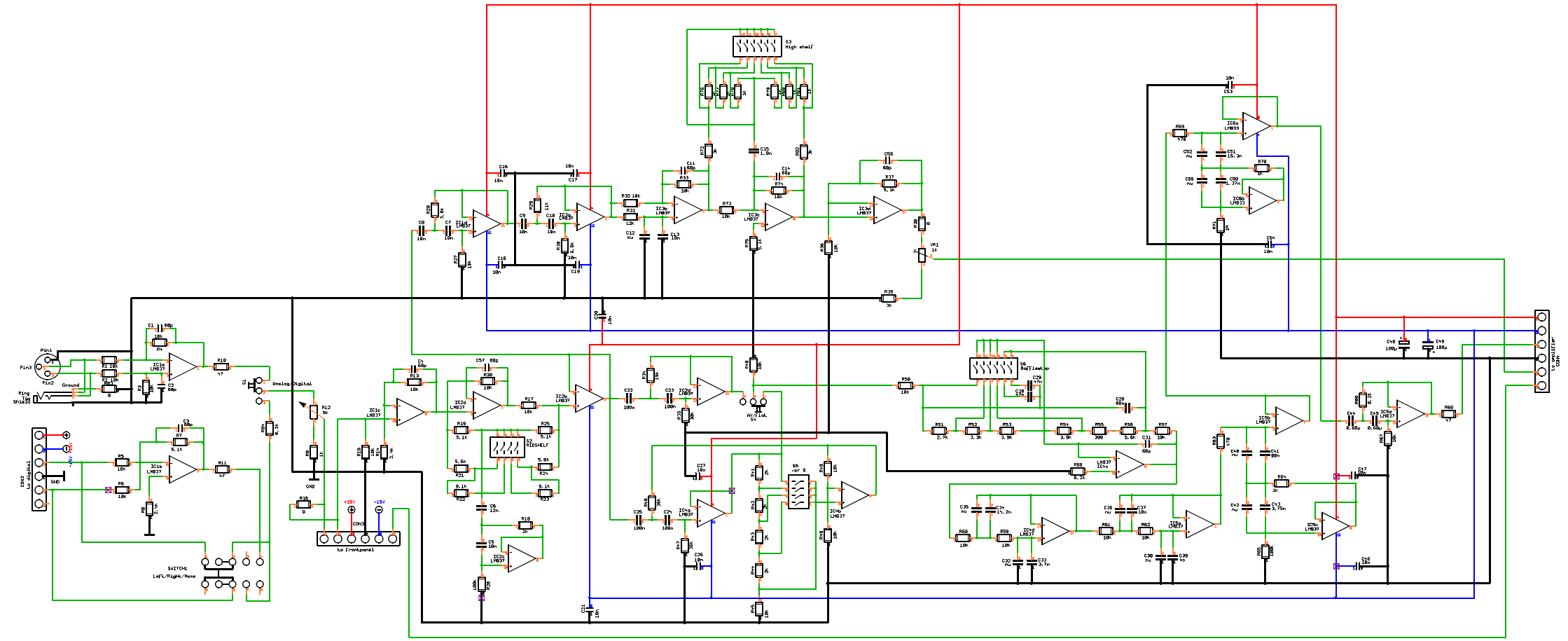
S3
High shelf
S2
MIDSHELF
S5
S6
Pin1
Pin2
Pin3
Ring
Shield
Ground
Analog
Digital
S1
GND
CON3
to Frontpanel
SWITCH1
Left/Right/Mono
CON2
Line Output
+15V
-15V
VR1
1k
to amplifier
CON1